WC7

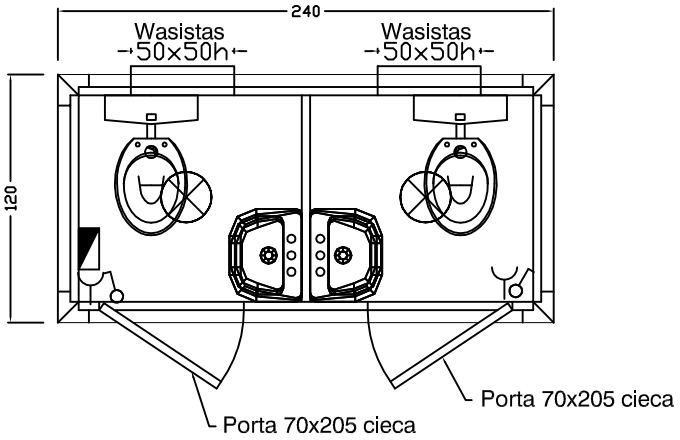

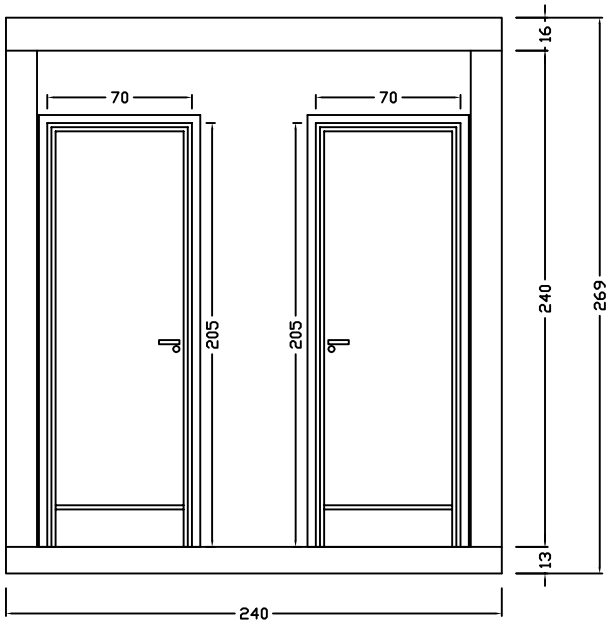

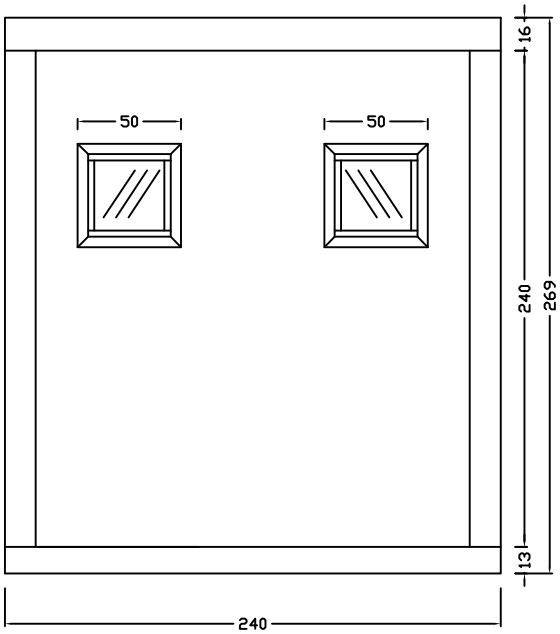

For.Mil. s.r.l.

Titolo	WC 7
Comm.te	
Edition	1
Sheet	1/1

Itemref	Quantity	Title/Name, designation, material, dimension etc		Article No./Reference	
Designed by F.P.	Checked by FPB	Approved by - date	Filename	Date	Scale

RevNo	Revision note	Date	Signature	Checked