WC 31

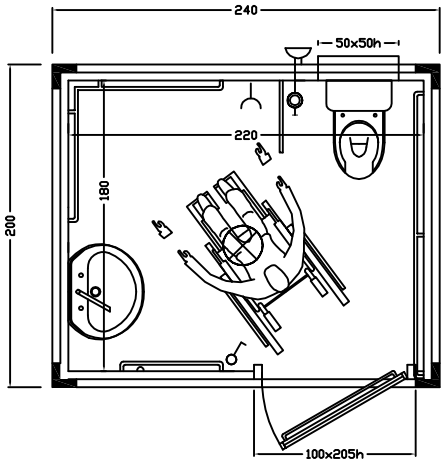

PORTA D'ACCESSO

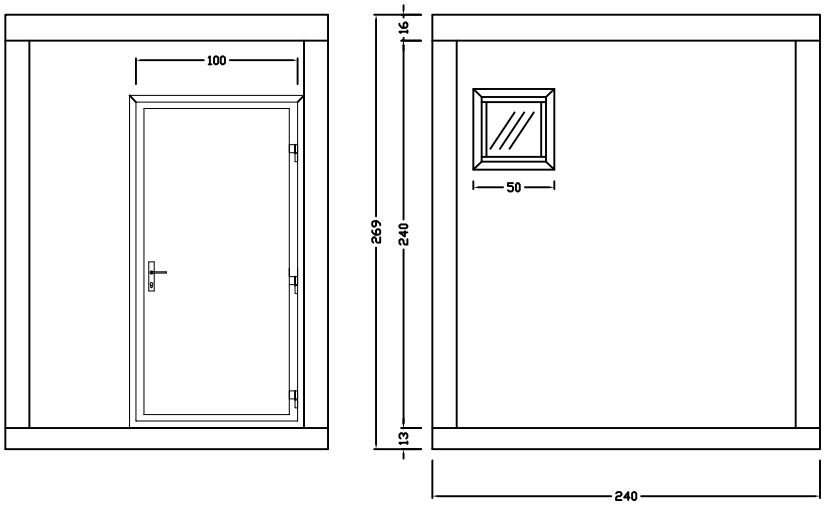

RevNo	Revision note	Date	Signature	Checked

For.Mil. s.r.l.

Titolo
WC 31

Comm.te

Edition	Sheet
1	1/1

Itemref	Quantity	Title/Name, designation, material, dimension etc	Article No./Reference		
Designed by F.P.	Checked by FPB	Approved by - date	Filename F.P.	Date	Scale