WC9

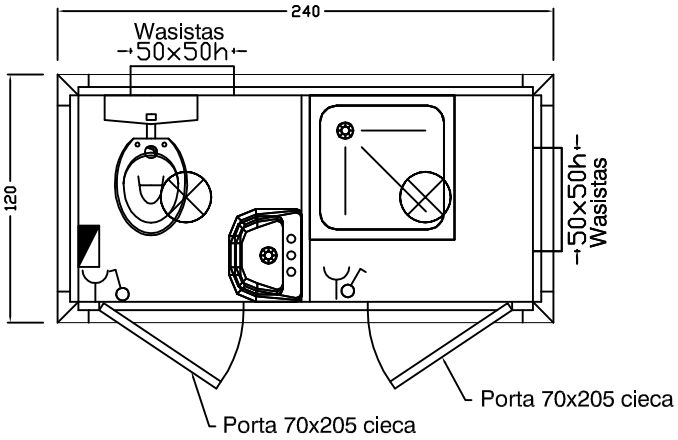

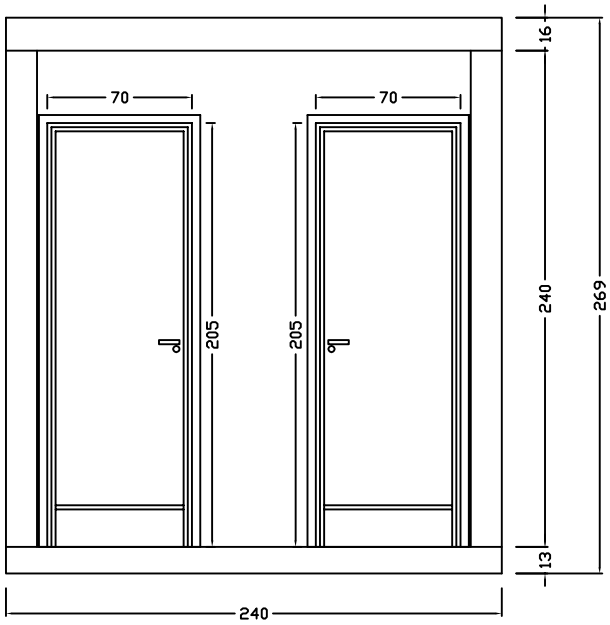

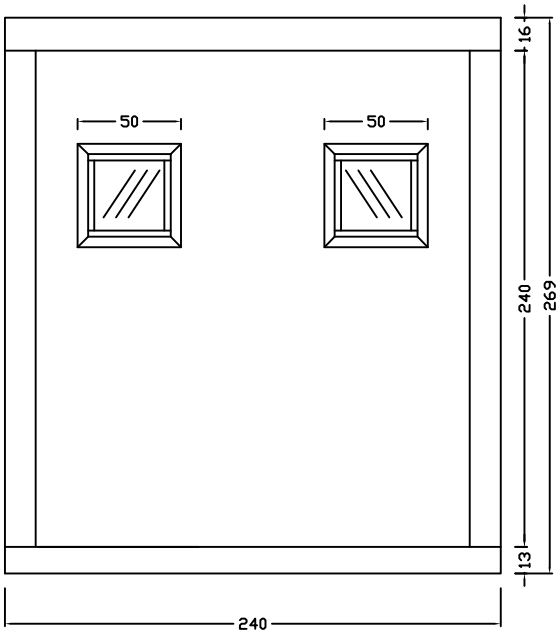

For.Mil. s.r.l.

Titolo WC 9							
Comm.te		Edition 1	Sheet 1/1	Itemref	Quantity	Title/Name, designation, material, dimension etc	Article No./Reference
				Designed by F.P.	Checked by FPB	Approved by - date	Filename
				Date	Scale		

RevNo	Revision note	Date	Signature	Checked