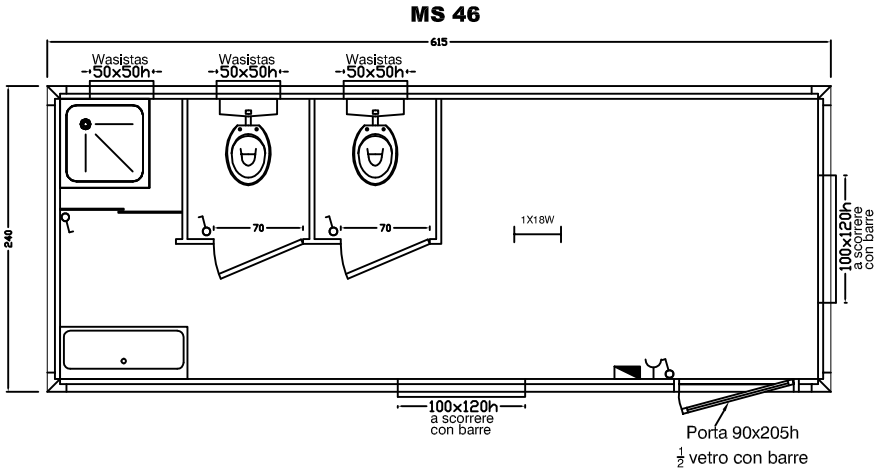

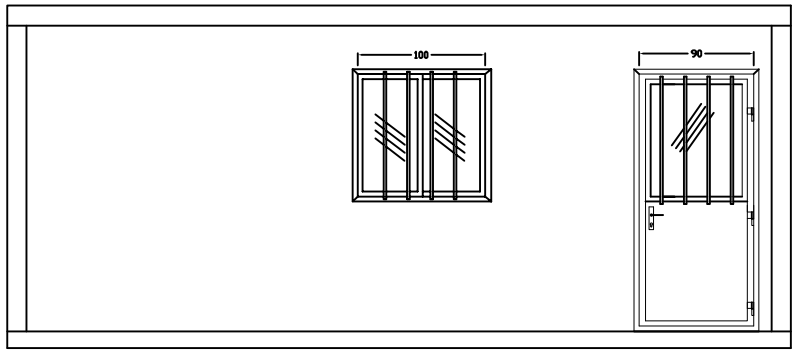

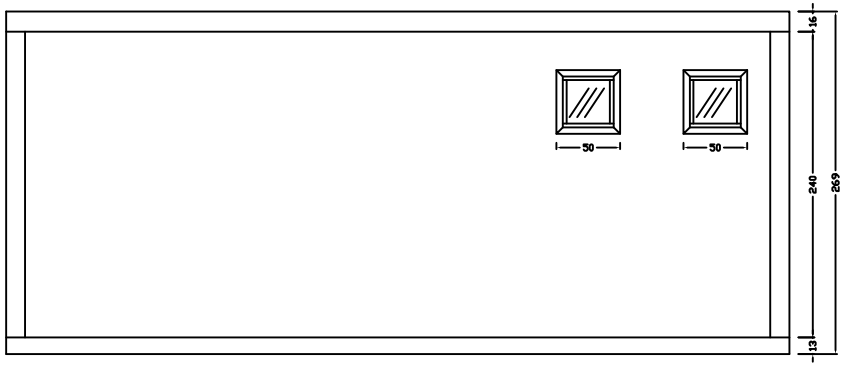

RevNo	Revision note	Date	Signature	Checked

For.Mil. s.r.l.

Titolo			
MS 46			
Comm.te	Edition	Sheet	
	1	1/1	

Itemref	Quantity	Title/Name, designation, material, dimension etc		Article No./Reference	
Designed by	Checked by	Approved by - date	Filename	Date	Scale